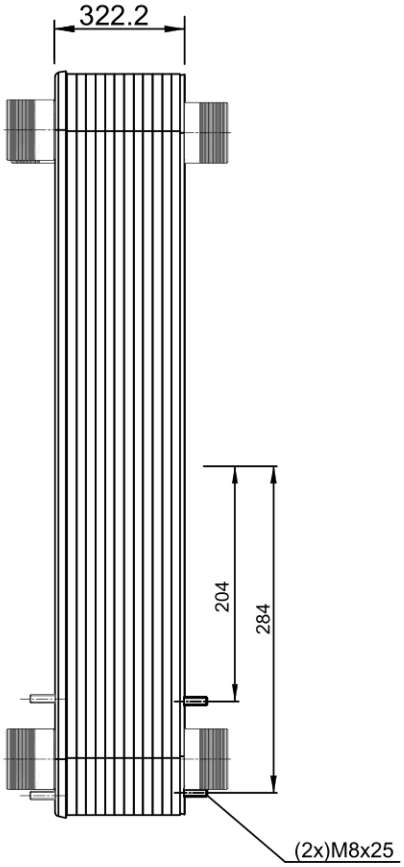

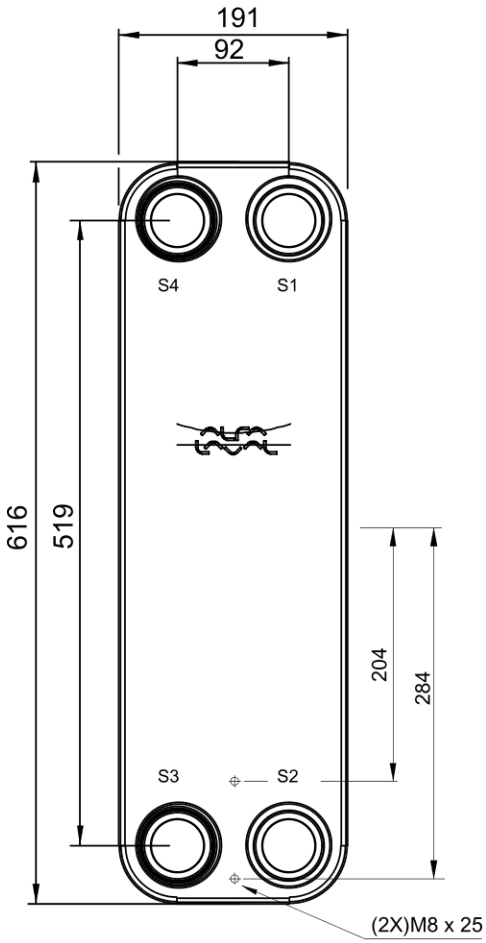

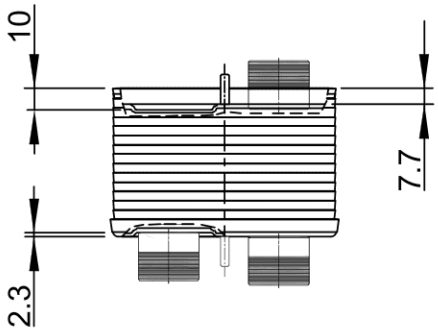

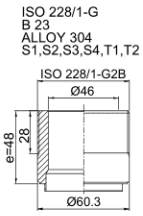

HEATING SURFACE	m²
NETWEIGHT	49.0 kg
OPERATING WEIGHT	kg
PLATE MATERIAL	ALLOY 316
PLATE GROUPING	1*59H/1*60H

ALL DIMENSIONS IN MILLIMETERS

Note that all unique customer requirements (i.e tolerance) need to be verified thru Alfa Laval.

SIDE	MEDIA	INLET	TEMP.	OUTLET	TEMP.	FLOW RATE	PRESSURE DROP	LIQUID VOL.
1	Water	S1	°C	S2	°C	kg/h	kPa	12.6 dm³
2	Water	S3	°C	S4	°C	kg/h	kPa	12.4 dm³

PRESSURE VESSEL APPROVAL PED

CB110-120H-F (3287184139)

www.alfalaval.com

CUSTOMER NAME / REF. NO.

COMPANY / REF.

TOTAL LENGTH	408 mm
TOTAL WIDTH	191 mm
TOTAL HEIGHT	616 mm

6/4/2023
REV 0